THIS DRAWING AND ALL INFORMATION CONTAINED HEREIN IS THE PROPERTY OF WELDON TECHNOLOGIES, INC. AND MAY NOT BE COPIED, REPRODUCED, OR DEVULGED TO UNAUTHORIZED PERSONS WITHOUT THE EXPRESS WRITTEN CONSENT OF WELDON TECHNOLOGIES, INC. AS IT IS BEING PROVIDED SOLELY FOR THE CONVENIENCE OF THE USER AND SHALL BE RETURNED TO WELDON TECHNOLOGIES, INC UPON REQUEST.

REVISIONS

REV.	ECN	DESCRIPTION	DATE	BY	APVD
A	R0455	RELEASE AS REFERENCE	9/2/03	TS	

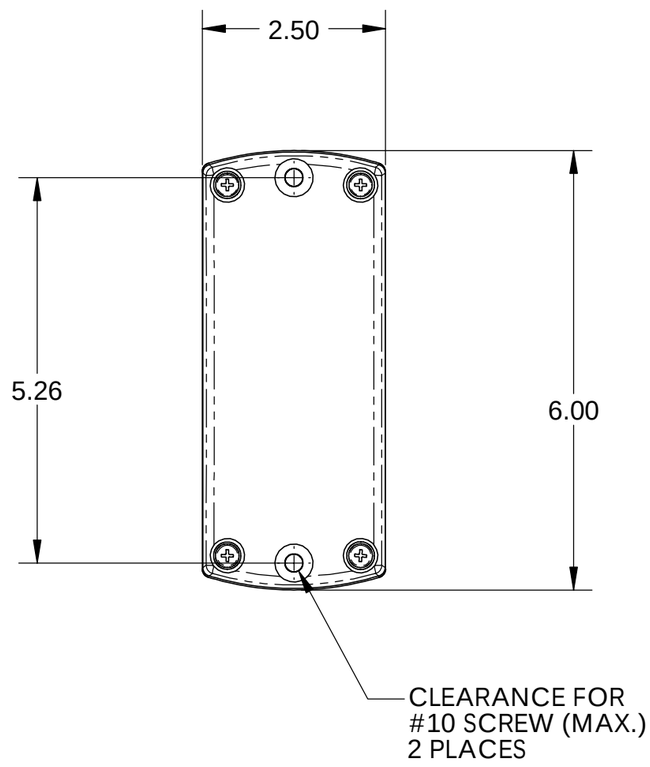

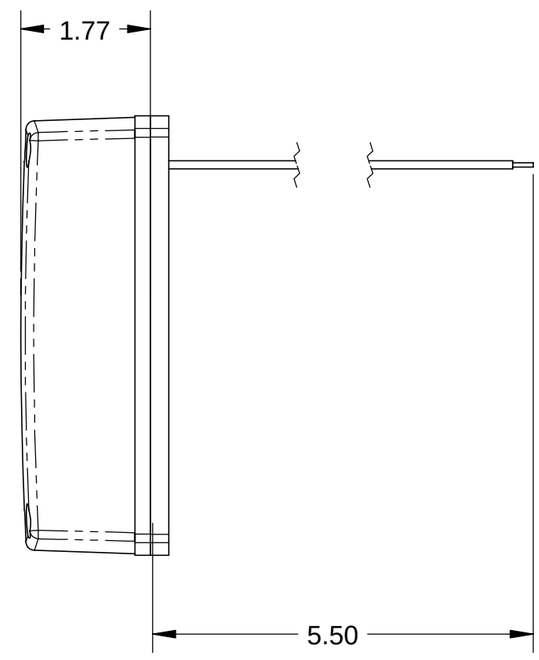

NOTE:
SINGLE FILAMENT LAMP ASSEMBLY SHOWN. DIMENSIONS ARE SAME FOR DUAL FILAMENT LAMPS

UNLESS OTHERWISE SPECIFIED DIMENSIONS ARE IN INCHES
TOLERANCES ARE:
X.XXX - ±0.005
X.XX - ±0.020
X.X - ±0.050
ANGLES - ±0.5°

MATERIAL

FINISH

DO NOT SCALE DRAWING

CAD GENERATED DRAWING, DO NOT MANUALLY UPDATE

APPROVALS		DATE
DRAWN	TS	9/2/03
CHECKED		
QUAL ENG		
MFG ENG		
PROJ. NO.		

WELDON TECHNOLOGIES, INC.

2 1/2" x 6" SERIES
SURFACE MOUNT
FLAT BACK

SIZE B | PART NO. C2030 | REV. A

SCALE: 1:1 | WELDON COMPUTER GRAPHICS | SHEET 1 OF 1