THIS DRAWING AND ALL INFORMATION CONTAINED HEREIN IS THE PROPERTY OF WELDON TECHNOLOGIES, INC. AND MAY NOT BE COPIED, REPRODUCED, OR DEVULGED TO UNAUTHORIZED PERSONS WITHOUT THE EXPRESS WRITTEN CONSENT OF WELDON TECHNOLOGIES, INC. AS IT IS BEING PROVIDED SOLELY FOR THE CONVENIENCE OF THE USER AND SHALL BE RETURNED TO WELDON TECHNOLOGIES, INC UPON REQUEST.

REVISIONS

REV.	ECN	DESCRIPTION	DATE	BY	APVD
A	0347	DOCUMENTATION RELEASE	6/6/02	TS	ST

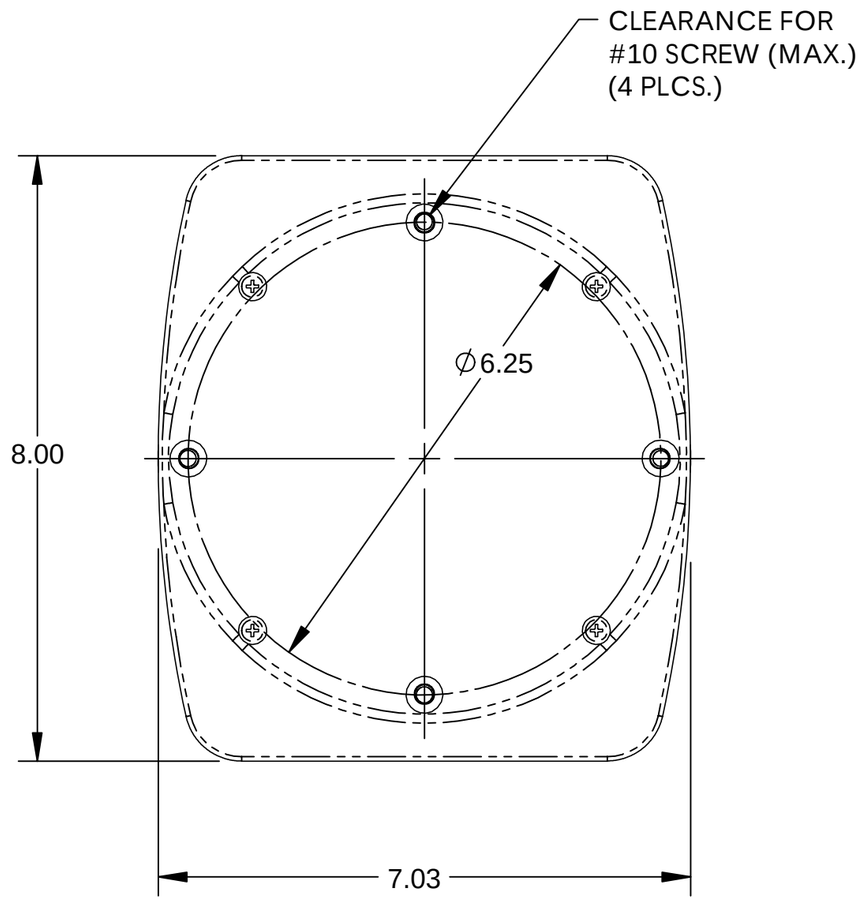

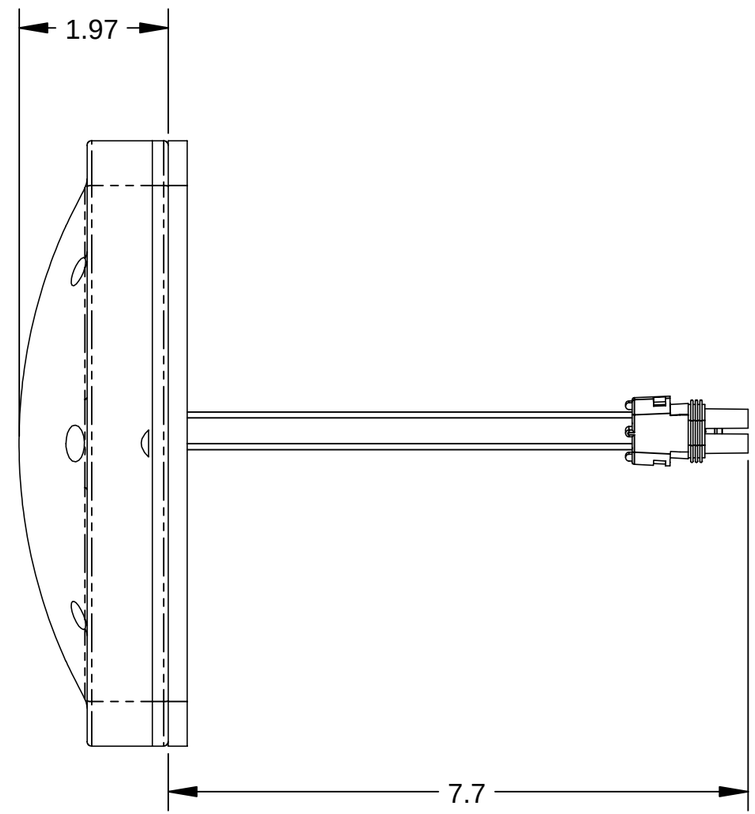

NOTE:
MATING HARNESS CONNECTOR IS PACKARD #12010973. TERMINALS AND SEALS SHOULD BE CHOSEN BASED ON WIRE GAUGE AND INSULATION DIAMETER

FUNCTION	WIRE COLOR	PACKARD POSITION	INCANDESCENT BULB TYPE
STOP	BLACK	A	2396
GROUND	WHITE	B	

UNLESS OTHERWISE SPECIFIED DIMENSIONS ARE IN INCHES
TOLERANCES ARE:
X.XXX - ±0.005
X.XX - ±0.020
X.X - ±0.050
ANGLES - ±0.5°

MATERIAL

FINISH

DO NOT SCALE DRAWING

CAD GENERATED DRAWING, DO NOT MANUALLY UPDATE

APPROVALS		DATE
DRAWN	TS	6/6/02
CHECKED	ST	6/6/02
QUAL ENG		
MFG ENG		
PROJ. NO.		

WELDON TECHNOLOGIES, INC.

STOP LAMP, FLAT BACK, CHROME, RED/AMBER W/PACKARD TERMINAL

SIZE B | PART NO. C2010-6359-00 | REV. A

SCALE: 1:1 | WELDON COMPUTER GRAPHICS | SHEET 1 OF 1