AKRON BRASS COMPANY

TECHNICAL SERVICE PARTS

STYLE 911
OZZIE™

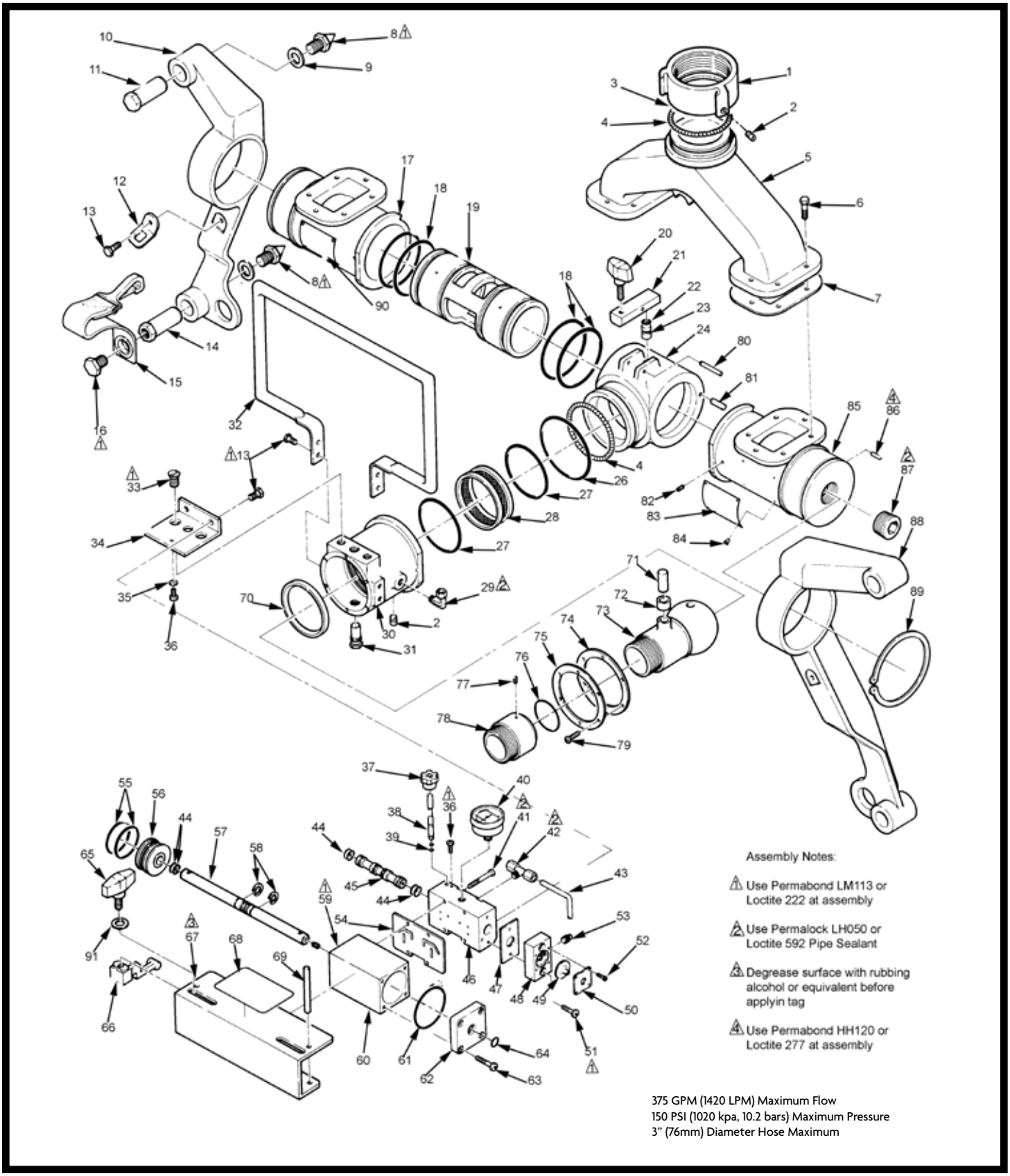

ITEM NO.	DESCRIPTION	PART NUMBER	QTY
1	2-1/2" NH Inlet†	101420	1
1	2-1/2" BSP Inlet	101422	1
2	Swivel Plug	742023	2
3#	2-1/2" NH Gasket	717043	1
3	2-1/2" BSP Gasket	714020	1
4	Ball Bearings	‡	75
5	Inlet Wye	101903	1
6	Hex Head Cap Screw	761077	12
7	Manifold Gasket	717040	2
8	Ground Spike	769666	4
9	Flat Steel Washer	784068	4
10	Right Leg	101902	1
11	Ground Sleeve	769302	2
12	Strap Clip	707224	2
13	Hex Head Cap Screw	761050	8
14	Safety Sleeve	769303	2
15	Strap Assembly	769379	2
16	Hex Head Cap Screw	761065	2
17	Manifold Right	109210	1
18	O-Ring	757065	4
19	Waterway Tube	109273	1
20	Elevation Knob	727032	1
21	Rocker Arm	101895	1
22	O-Ring	757005	1
23	Plunger	744284	1
24	Vertical Turret	101906	1
26	O-Ring	757149	1
27	O-Ring	757221	2
28	Screen	768770	1
29	Elbow Fitting	713075	2
30	Horizontal Turret	101907	1
33	Flat Head Screw	767068	2
34	Motor Bracket	704256	1
35	Washer	784072	1
36	Button Head Screw	765143	2
37	Brake Knob	727031	1
38	Valve Stem	769380	1
39	O-Ring	757262	2
40	Pressure Gauge (PSI)	718184	1
40	Pressure Gauge (Bar)	718134	1
41	Socket Head Cap Screw	767100	4
42	Brass Tee Fitting	712271	1
43	Bleed Tube	772130	2
44#	O-Ring	757260	6
45	Valve Spool	768228	1
46	Valve Block	703366	1
47#	Valve Cap Gasket	714193	2
48	Valve Cap	101900	2
49	Diaphragm Valve	779053	2
50	Retainer	758168	2
51	Socket Head Cap Screw	767086	4
52	Pan Head Screw	763012	8
53	Exhaust Plug	744283	2
54	Block Gasket	714223	1
55#	O-Ring	757259	2
56	Piston	744285	1
57	Cylinder Rod	749025	1
58	Retaining Ring	758192	2
59	Socket Head Set Screw	765071	2
60	Cylinder Block	101899	1
61	O-Ring	757271	2
62	Cylinder Cap	707225	2
63	Button Head Screw	766009	8
64#	O-Ring	757258	2
65	Limit Knob	727030	2
66	Limit Arm	702049	2
67	Drive Cover	707223	1
68	Name Plate	773204	1
69	Locking Pin	741053	2
70#	Ball Seal	769378	1

ITEM NO.	DESCRIPTION	PART NUMBER	QTY
71	Roll Pin	744287	1
72	Roller	758169	1
73	Outlet	101904	1
74	Ball Cover	707227	1
75	Ball Cover Retainer	707228	1
76	O-Ring	757125	1
77	Allen Head Screw	765025	1
78	1-1/2" NH Discharge†	101896	1
78	1-1/2" NPSH Discharge† (Not Shown)	101897	1
78	1-1/2" BSP Discharge† (Not Shown)	101898	1
79	Pan Head Screw	763012	6
80	Roll Pin	744060	1
81	Roll Pin	744067	2
82	Socket Head Set Screw	765070	6
83	Identification Tag	773203	1
84	Copper Nail Grip	736045	4
85	Manifold Left	109094	1
86	Roll Pin	744069	2
87	Pipe Plug	744286	2
88	Left Leg	101901	1
89	Retaining Ring	758068	2
90	Warning Tag (English)	773501	1
90	Warning Tag (French)	773208	1
90	Warning Tag (German)	773207	1
90	Warning Tag (Spanish)	773209	1
91	Washer	784075	2
92	Oscillation Tag On/Off (Not Shown)	773292	1
93	Caution Tag (Not Shown)	773291	1

* Note: BIM Inlet requires BSP Gasket (PN 714020) and BSP Inlet (PN 101422)
** Storz Inlet includes items 92-96 (not shown)
† For other threads order by description and thread size (ODM and TPI) or by Akron Thread Code.
‡ Packet of 50 Ball Bearings - P/N 109041
# Parts included in Field Service Kit # 9191

Water Motor Assembly

ITEM NO.	DESCRIPTION	PART NUMBER	QTY
S/A *	Water Motor Assembly with PSI Gauge	09110036	1
S/A *	Water Motor Assembly with BAR Gauge	09110027	1

* Must specify gauge type (PSI or BAR)

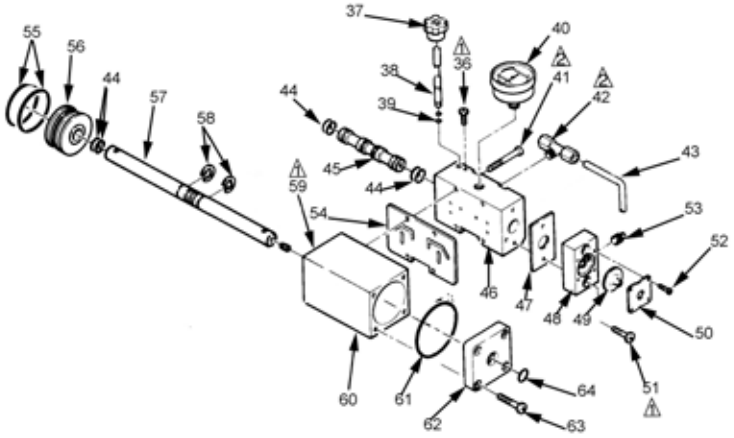

STYLE 911
OZZIE™
TECHNICAL SERVICE PARTS LIST

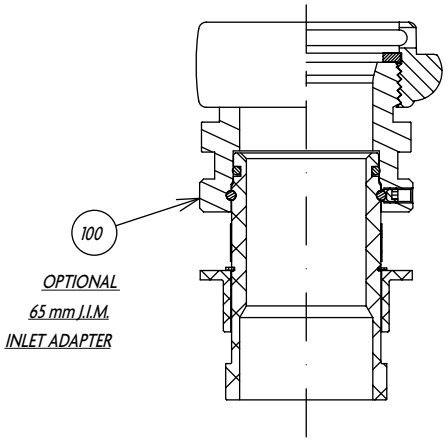

OPTIONAL
65 mm J.I.M.
INLET ADAPTER

OPTIONAL 65mm J.I.M. INLET ADAPER			
ITEM NO.	DESCRIPTION	PART NUMBER	QTY
100	2.5 " NH INLET ADAPTER	09110040	1

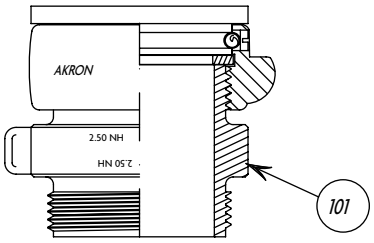

OPTIONAL MALE
INLET ADAPTER

OPTIONAL MALE INLET ADAPTER			
ITEM NO.	DESCRIPTION	PART NUMBER	QTY
101	2.5 " NH M X 2.5NH M ADAPTER	03360009	1

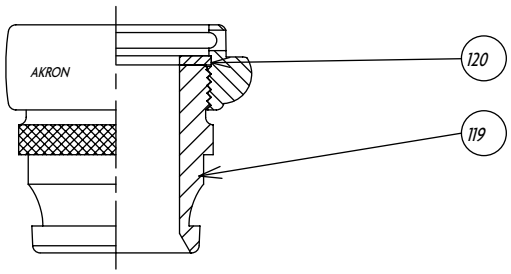

BRITISH INSTANTANEOUS

OPTIONAL BRITISH INSTANTANEOUS ADAPTER			
ITEM NO.	DESCRIPTION	PART NUMBER	QTY
119	BIM ADAPTER	03260005	1
120	BSP GASKET	714020	1

-- PACKET OF 50 BALL BEARINGS - PN 109041

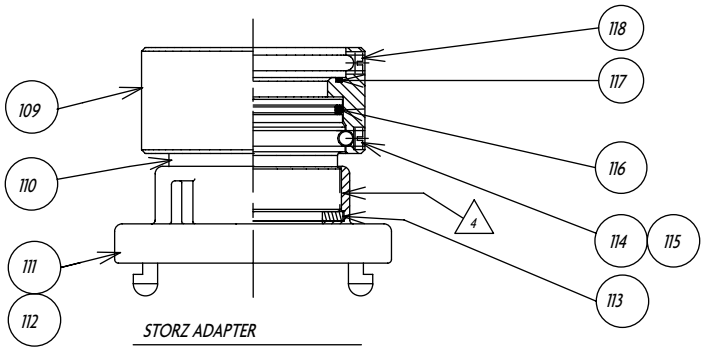

STORZ ADAPTER

OPTIONAL STORZ INLET ADAPTER				
ITEM NO.	DESCRIPTION	PART NUMBER		QTY
		65 mm	75 mm	
109	BODY ADAPTER	102085	102085	1
110	ADAPTER	104401	104401	1
111	STORZ FITTING	107923	104393	1
112	SEAL STORZ	769033	769331	1
113	STORZ GASKET	714179	714179	1
114	BALL BEARINGS -1/4"	109041 --	109041 --	38
115	SWIVEL PLUG	742023	742023	1
116	O-RING	757045	757045	1
117	O-RING	757087	757087	1
118	SET SCREW	765043	765043	1

Tested... Proven... Trusted.

ISO 9001 REGISTERED COMPANY

PHONE: 330.264.5678 or 800.228.1161 | FAX: 330.264.2944 or 800.531.7335 | akronbrass.com

REVISED: 6/13

WARRANTY AND DISCLAIMER: We warrant Akron Brass products for a period of five (5) years after purchase against defects in materials or workmanship. Akron Brass will repair or replace product which fails to satisfy this warranty. Repair or replacement shall be at the discretion of Akron Brass. Products must be promptly returned to Akron Brass for warranty service.

We will not be responsible for: wear and tear; any improper installation, use, maintenance or storage; negligence of the owner or user; repair or modification after delivery; damage; failure to follow our instructions or recommendations; or anything else beyond our control. WE MAKE NO WARRANTIES, EXPRESS OR IMPLIED, OTHER THAN THOSE INCLUDED IN THIS WARRANTY STATEMENT, AND WE DISCLAIM ANY IMPLIED WARRANTY OF MERCHANTABILITY OR FITNESS FOR ANY PARTICULAR PURPOSE. Further, we will not be responsible for any consequential, incidental or indirect damages (including, but not limited to, any loss of profits) from any cause whatsoever. No person has authority to change this warranty.

© Akron Brass Company. 2012 All rights reserved. No portion of this can be reproduced without the express written consent of Akron Brass Company.