STYLE 3418 Apollo™ EL (Electric) Monitor
OPERATING & MAINTENANCE INSTRUCTIONS

The Akron Style 3418 Apollo EL (Electric) Monitor is designed to provide efficient trouble-free operation for many years. The following operating and maintenance instructions are provided to assist in obtaining the best possible performance for this unit.

PRODUCT RATINGS

Maximum Flow:

1250 GPM (4800 LPM) Direct Mount

Maximum Pressure:

200 PSI (1380 Kpa, 14 BAR)

PRODUCT WARNINGS

⚠ WARNING A 1/4 turn shut off valve should not be used with the Apollo. If any other type of shut off valve is used, it must be opened and closed slowly. Opening and closing a valve too quickly may result in damage to the Apollo and other equipment, which can result in an injury to the operator or others.

⚠ WARNING Read and follow the vertical Safety Stop Plunger Pin Caution Tag.

⚠ WARNING Under freezing conditions the monitor must be drained to prevent damage.

Figure 1

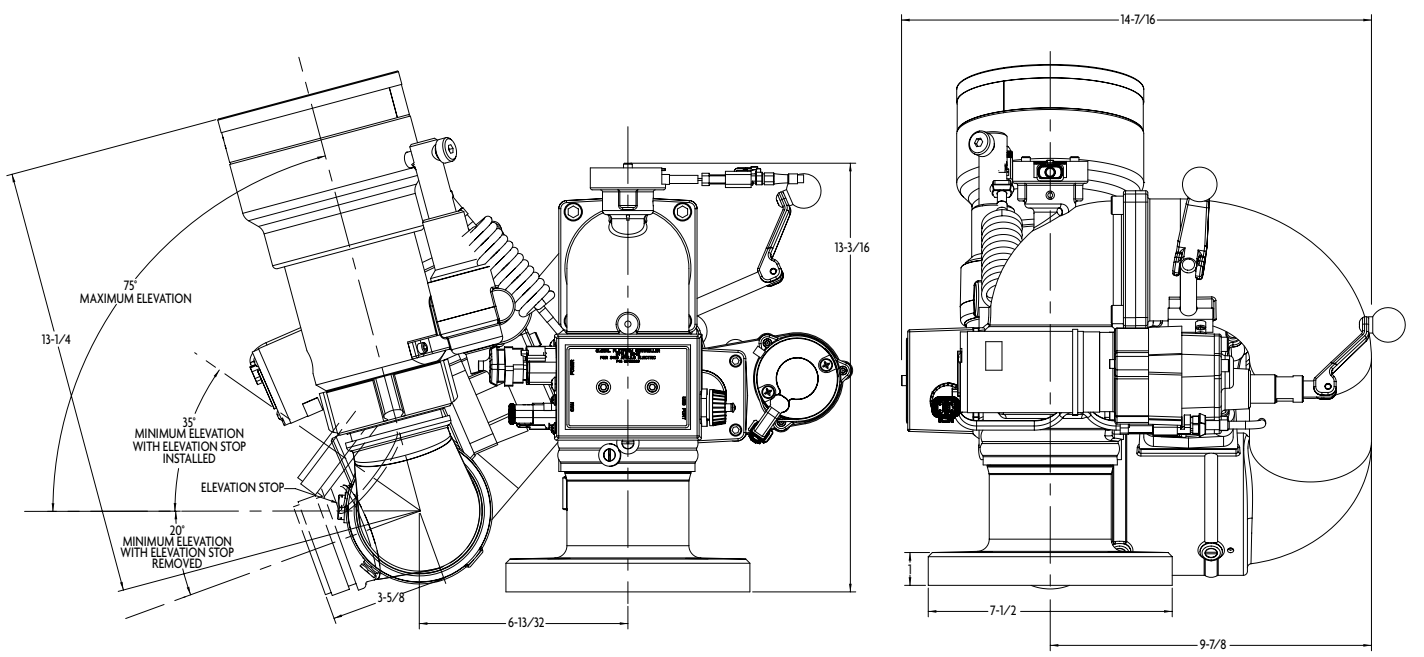

Figure 2

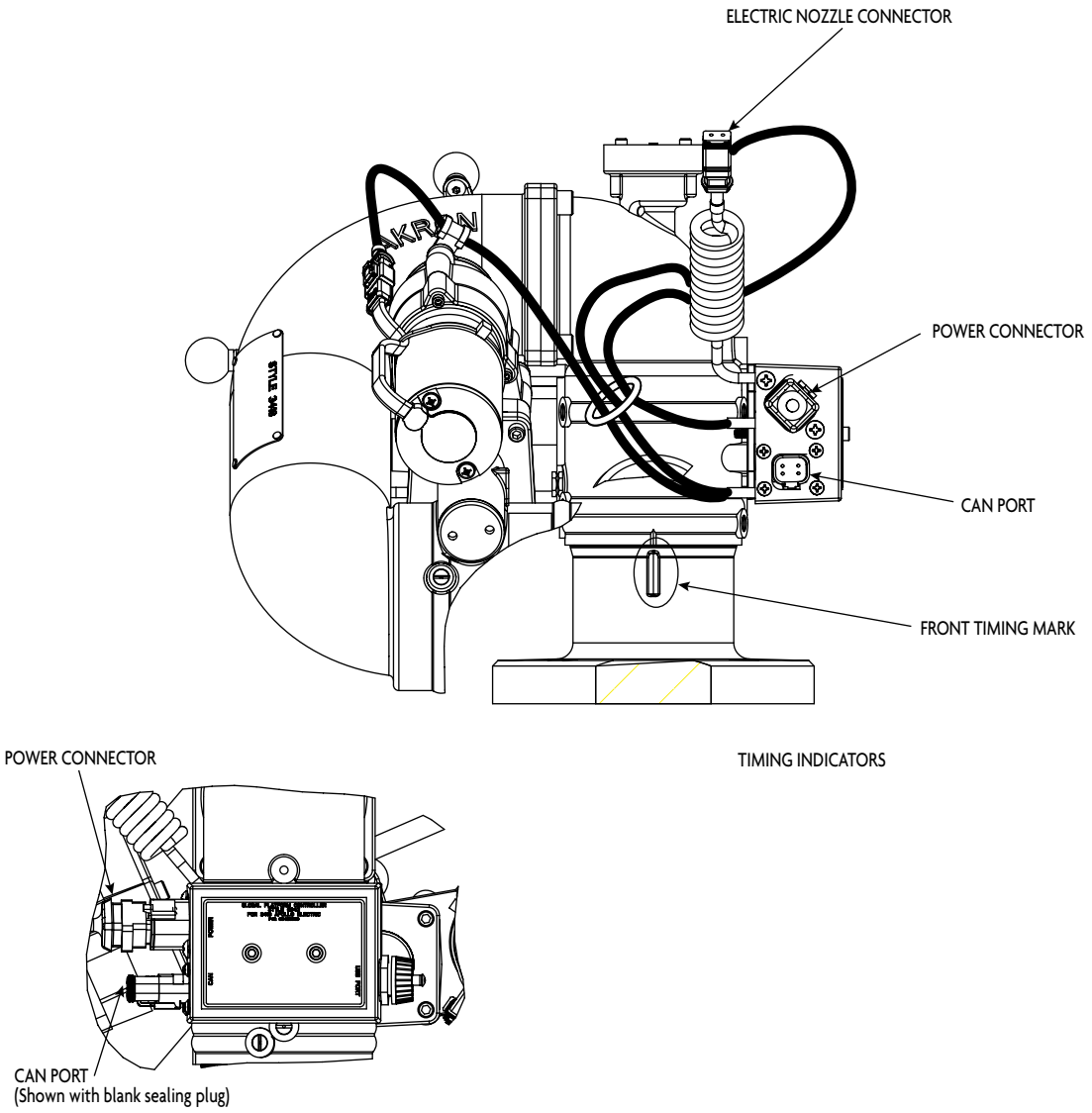

1. MECHANICAL MONITOR ATTACHMENT

⚠ WARNING INSUFFICIENT STRUCTURAL SUPPORT CAN LEAD TO FAILURE, WHICH HAS POTENTIAL TO CAUSE AN INJURY. THEREFORE, ADDITIONAL STRUCTURAL SUPPORT AT THE INLET FLANGE OR AT THE INLET ELBOW MAY BE REQUIRED.

The Apollo EL monitor is to be mounted on the waterway with four 5/8" bolts and nuts of grade five minimum and suitable washers with a minimum of six threads engagement. A suitable flange gasket or O-ring is required and is supplied by the OEM or end user. There is a timing mark on the inlet base that indicates the front position of the monitor (Figure 2). The bolts must be tightened in a criss-cross pattern progressively increasing tightening torque to a maximum of 100 lb.ft.dry.

2. ELECTRICAL INSTALLATION

The Apollo EL is supplied with a 24" long coiled power cable. There is a connector on one end that plugs into the power connector of the monitor controller (Figure 2). The other end has two wires (black and white) that are terminated with butt splice crimp connectors. Connect the black wire to the vehicle ground and the white wire to vehicle power. A 20 amp fuse should be used for the monitor circuit.

No other wiring is necessary if the monitor is to be used with a handheld wireless control. If a hard wired control is required, cable part number 721565, a 20ft. pre-terminated controller cable may be used. This cable has four pin connectors on each end. Either end can be plugged into the monitor controller CAN port (Figure 2). The other end can be plugged into a style 6041 CAN toggle switch box, or style 6035 CAN joystick. Power for the switch box or joystick is delivered through this cable from the monitor controller.

The Apollo EL ships with a blank plug inserted into the CAN control port. This plug must be removed prior to installing a wired CAN control device.

If an electric fog nozzle is used, it must be connected to the small coiled cord from the monitor controller (Figure 2).

3. OPERATION:

A. To operate the Apollo EL with the handheld wireless control:

1. Press the Power On/Off button momentarily to turn the remote on. The On/Off Transmit light in the lower right corner of the remote will illuminate. Note: If the remote has not been synchronized to the monitor, see the wireless remote instructions (Document 120315) for the synchronization procedure.
2. To move the monitor right/left/up/down, press the appropriate triangular shaped buttons on the lower half of the remote.
3. To change the nozzle pattern to a straight stream, press the "STRAIGHT" button located below and to the left of the "Power On/Off" button.
4. To change the nozzle pattern to fog, press the "FOG" button located below and to the right of the "Power On/Off" button.
5. To initiate oscillation, press and hold the "AUX" button on the bottom left corner of the remote. The monitor will begin rotating to the right. When the desired right oscillation limit is reached, release the "AUX" button. The monitor will now begin to rotate to the left. Press and hold the "AUX" button until the left oscillation limit is reached, then release the "AUX" button. The monitor will now oscillate between the left and right limits you have set. To adjust the oscillation limits, press and hold the "AUX" button when moving in the direction in which you wish to change the limit and release the "AUX" button when the new limit is reached. The nozzle can be raised or lowered during oscillation.
6. To cancel oscillation, press either the "RIGHT" or "LEFT" buttons on the remote. Once oscillation mode is cancelled, the limits must be reset when oscillation is started again.

B. To operate the Apollo EL with the panel mounted CAN control station:

1. The 60410012 CAN toggle switch station provides a panel mounted control station for the Apollo PE. The CAN toggle switch station connects to the Apollo PE controller CAN port with cable part number 721565 4 pin to 4 pin CAN communications cable with built in termination resistors.
2. To move the Apollo PE nozzle upward, press the "RAISE / LOWER" toggle switch upward. When the switch is released the nozzle will stop. To lower the nozzle, press the "RAISE / LOWER" toggle switch downward. When the switch is released the nozzle will stop.
3. To move the Apollo PE to the right, press the "RIGHT / LEFT" toggle switch to the right. When the switch is released the monitor will stop. To move the monitor to the left, press the "RIGHT / LEFT" toggle switch to the left. When released the monitor will stop.
4. To change the nozzle to a straight stream pattern press the "STREAM / FOG" switch upward, for a fog pattern, press the "STREAM / FOG" switch downward. When the desired pattern is achieved, release the "STREAM / FOG" switch.
5. To initiate oscillation, press and hold the "OSCILLATION START/SET – PAUSE/RESUME" switch upward. The monitor will begin rotating to the right. When the desired right oscillation limit is reached, release the "OSCILLATION START/SET – PAUSE/ RESUME" switch. The monitor will now begin to rotate to the left. Press and hold the "OSCILLATION START/SET – PAUSE/ RESUME" switch upward again until the left oscillation limit is reached, then release the "OSCILLATION START/SET – PAUSE/ RESUME" switch. The monitor will now oscillate between the left and right limits you have set. To adjust the oscillation limits, press and hold the "OSCILLATION START/SET – PAUSE/RESUME" switch upwared when moving in the direction in which you wish to change the limit and release the "OSCILLATION START/SET – PAUSE/RESUME" switch when the new limit is reached. The nozzle can be raised or lowered during oscillation. To pause oscillation, press the "OSCILLATION START/SET – PAUSE/ RESUME" switch downward momentarily and release. This will pause the oscillation with the current position limits. To re-start oscillation, press the "OSCILLATION START/SET – PAUSE/RESUME" switch downward momentarily and release to resume the oscillation with the current position settings. To cancel oscillation, press the "RIGHT /LEFT" switch either direction momentarily.

ROUTINE MAINTENANCE INSTRUCTIONS

Style 3419 Portable Electric Monitor

The following maintenance procedures will extend the service life of this appliance.

A. Examine the points of the ground spikes in the portable base. If the flat of any spike exceeds $^{1}/_{16}$" (1.5mm) diameter, it must be replaced. ORDER GROUND SPIKE SERVICE KIT #9190.
B. Check the spring loaded spike holders in the portable base to ensure that they move freely. Use a dry spray lubricant if lubrication is required.
C. Check that the elevation stop operates properly and must be released to lower the unit below 35° elevation.
D. Check both the inlet clappers (dual inlet base only) function properly. Lubrication is not normally required in this area.
E. Check that the latch of the safety chain hook engages properly in the chain.
F. If any of the parts do not function properly, contact Akron Brass for repair instructions or return the unit to the Akron Brass Company.

NOTES

PHONE: 330.264.5678 or 800.228.1161 | FAX: 330.264.2944 or 800.531.7335 | akronbrass.com

REVISED: 6/13

WARRANTY AND DISCLAIMER: We warrant Akron Brass products for a period of five (5) years after purchase against defects in materials or workmanship. Akron Brass will repair or replace product which fails to satisfy this warranty. Repair or replacement shall be at the discretion of Akron Brass. Products must be promptly returned to Akron Brass for warranty service.

We will not be responsible for: wear and tear; any improper installation, use, maintenance or storage; negligence of the owner or user; repair or modification after delivery; damage; failure to follow our instructions or recommendations; or anything else beyond our control. WE MAKE NO WARRANTIES, EXPRESS OR IMPLIED, OTHER THAN THOSE INCLUDED IN THIS WARRANTY STATEMENT, AND WE DISCLAIM ANY IMPLIED WARRANTY OF MERCHANTABILITY OR FITNESS FOR ANY PARTICULAR PURPOSE. Further, we will not be responsible for any consequential, incidental or indirect damages (including, but not limited to, any loss of profits) from any cause whatsoever. No person has authority to change this warranty.